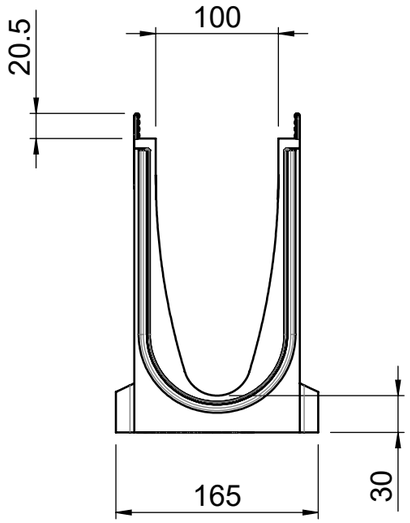

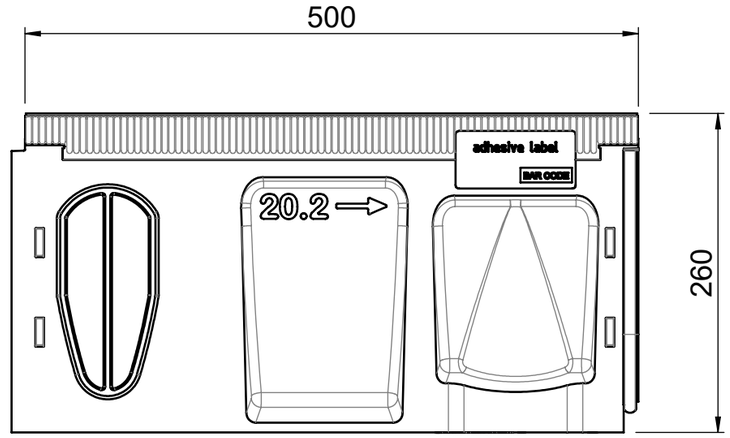

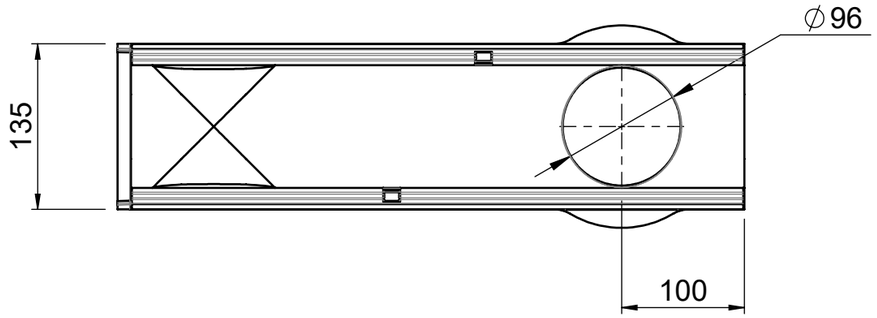

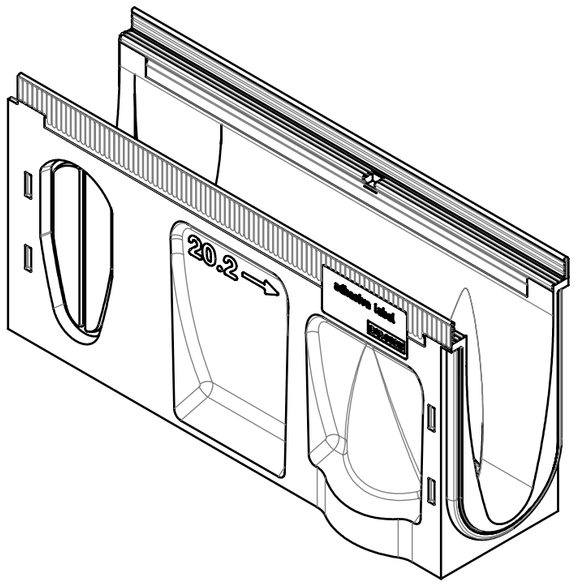

material number: 2003180
local article number: 132373

ACO Ahlmann SE & Co. KG Am Ahlmannkai 24782 Büdelsdorf www.aco.com		drawing-no.: **1037966-M**	index: **006**	documenttype: marketing drw.
	created by: rkumar	reviewed by: smeier	projection:ISO-E	scale: 1:5

title:
Multiline Seal in
Channel V100S 0,5m LLD 20.2 with galv. steel rail
Rinne V100S 0,5m LLD 20.2 mit verzinkter Stahlzarge

serial-released

The reproduction, distribution and utilization of this document as well as the communication of its contents to others without express authorization is prohibited. Offenders will be held liable for the payment of damages. All rights reserved in the event of the grant of a patent, utility model or design. Observe copyright by ISO 16016

release date: 10.02.2023
sheet: 1/1

Solidworks 2017 - DIN A3 - Version 1.6