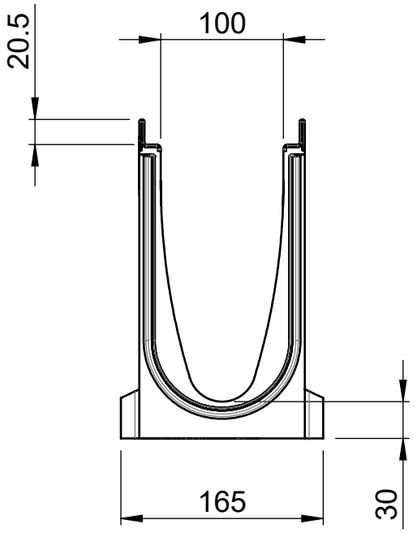

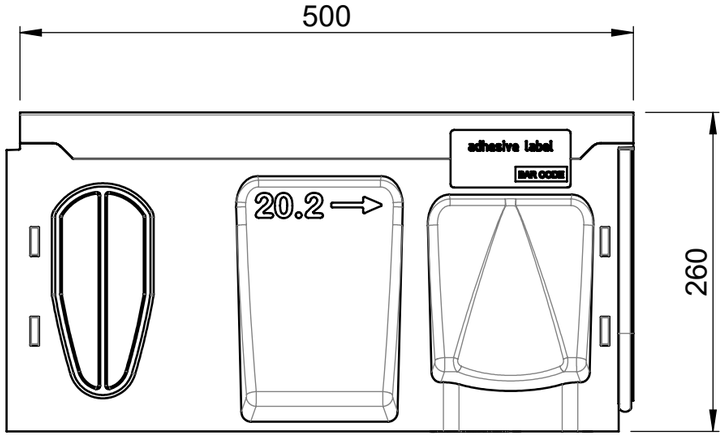

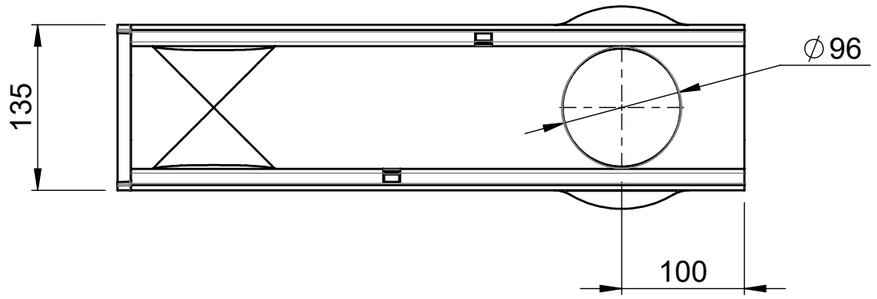

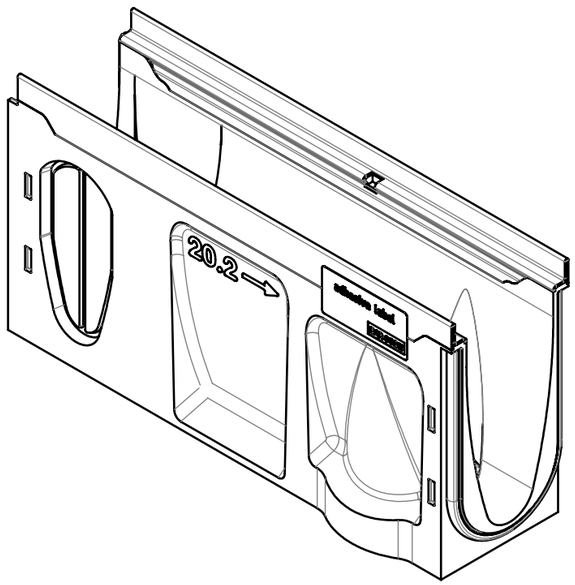

material number: 2003242
local article number: 132473

ACO Ahlmann SE & Co. KG Am Ahlmannkai 24782 Büdelsdorf www.aco.com		drawing-no.: **1038137-M**	index: **003**	documenttype: marketing drw.
	created by: rkumar	reviewed by: smeier	projection:ISO-E	scale: 1:5

title:
Multiline Seal in
Channel V100E 0,5m LLD 20.2 with stainless steel rail
Rinne V100E 0,5m LLD 20.2 mit Edelstahlzarge

serial-released

The reproduction, distribution and utilization of this document as well as the communication of its contents to others without express authorization is prohibited. Offenders will be held liable for the payment of damages. All rights reserved in the event of the grant of a patent, utility model or design. Observe copyright by ISO 16016

release date: 10.02.2023
sheet: 1/1

Solidworks 2017 - DIN A3 - Version 1.6