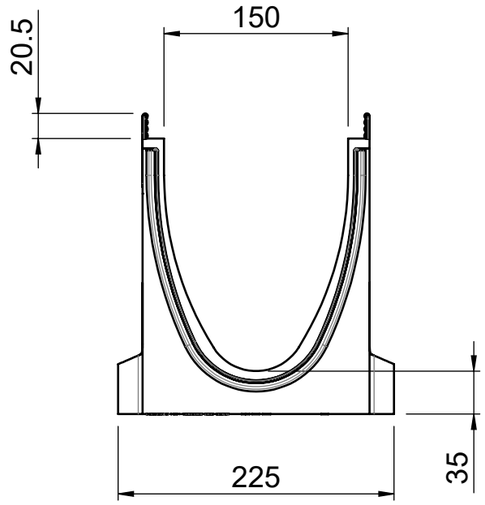

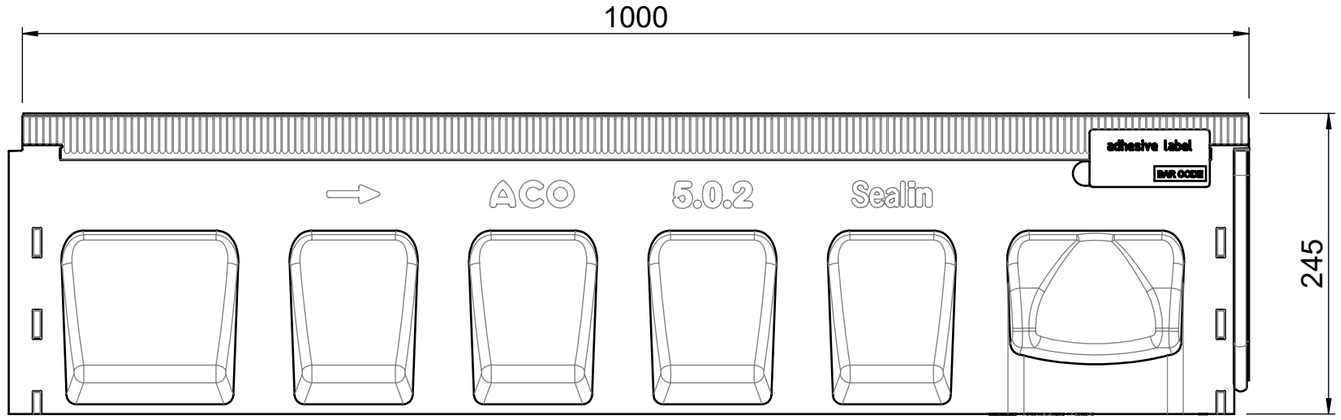

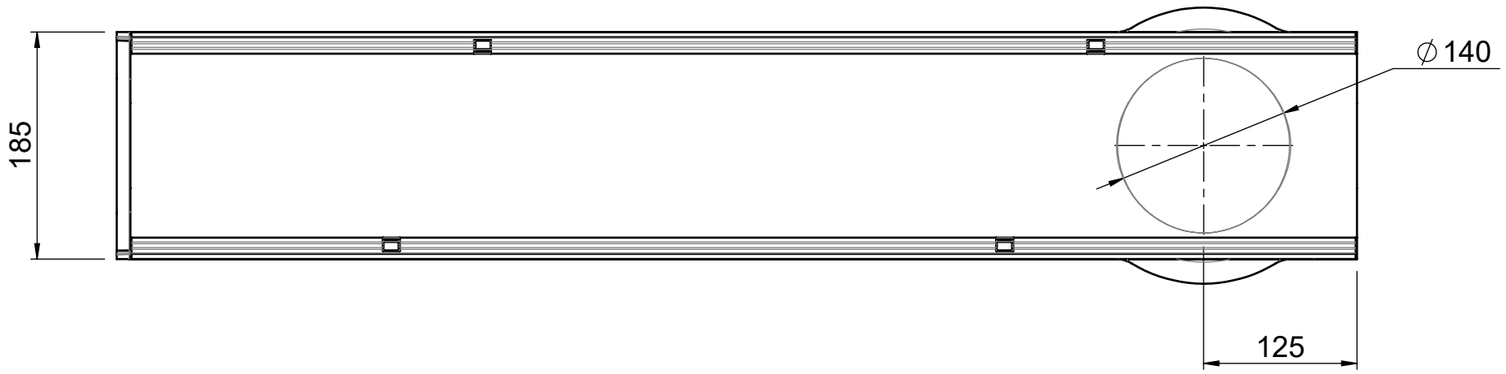

SCALE 1 : 10

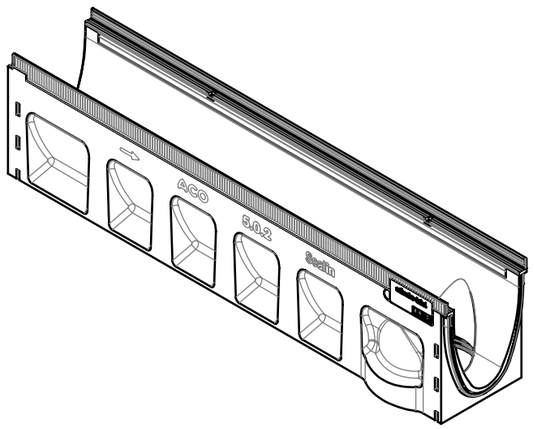

material number: 2003739
local article number: 133344

ACO Ahlmann SE & Co. KG Am Ahlmannkai 24782 Büdelsdorf www.aco.com		drawing-no.: 1033538-M	index: 004	documenttype: marketing drw.
	created by: rkumar	reviewed by: smeier	projection:ISO-E	scale: 1:5

title:
Multiline Seal in
Channel V150S 1m LLD 5.0.2 with galv. steel rail
Rinne V150S 1m LLD 5.0.2 mit verzinkter Stahlzarge

serial-released

The reproduction, distribution and utilization of this document as well as the communication of its contents to others without express authorization is prohibited. Offenders will be held liable for the payment of damages. All rights reserved in the event of the grant of a patent, utility model or design. Observe copyright by ISO 16016

release date: 07.02.2023
sheet: 1/1

Solidworks 2014 - DIN A3 - Version 1.6