SCALE 1 : 10

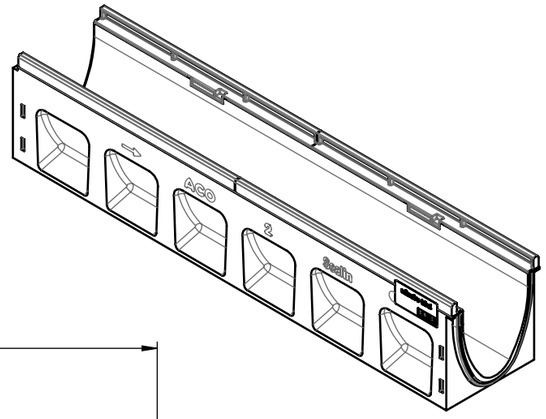

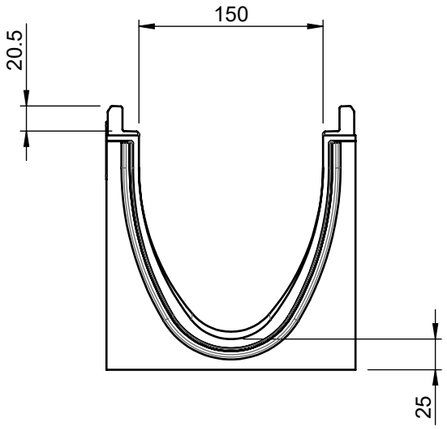

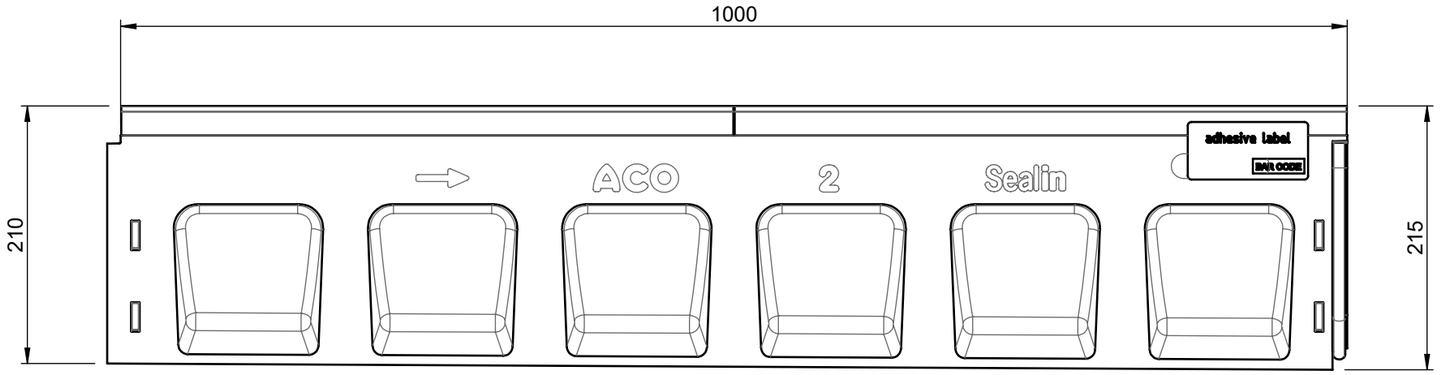

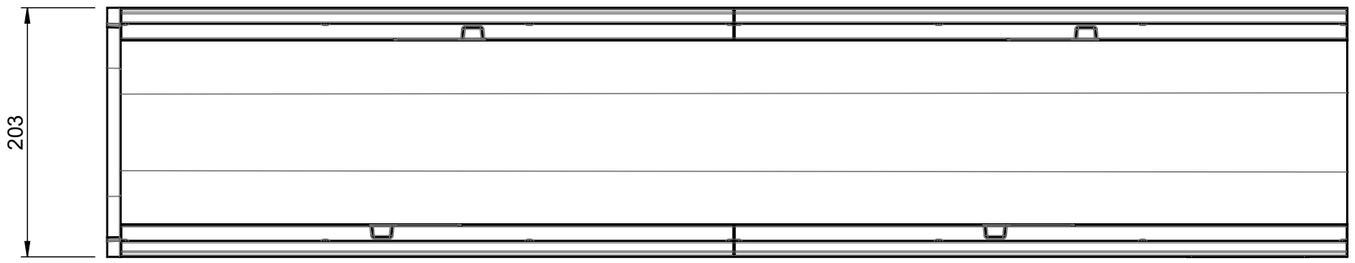

material number: 3000768

local article number: 152202

ACO Serverin Ahlmann GmbH & Co. KG **Am Ahlmannkai** **24782 Büdelsdorf** **www.aco.com**		drawing-no.: **1045217-M**	index: **003**	documenttype: marketing drw.
	created by: rkumar	reviewed by: vshetty	projection:ISO-E	scale: 1:5

title:

PowerDrain
Slope Channel PowerDrain Seal in V150G 2
Gefällerinne PowerDrain Seal in V150G 2

serial-released

The reproduction, distribution and utilization of this document as well as the communication of its contents to others without express authorization is prohibited. Offenders will be held liable for the payment of damages. All rights reserved in the event of the grant of a patent, utility model or design. Observe copyright by ISO 16016

release date: 17.02.2022

sheet: 1/1

Solidworks 2019 - DIN A3 - Version 1.7